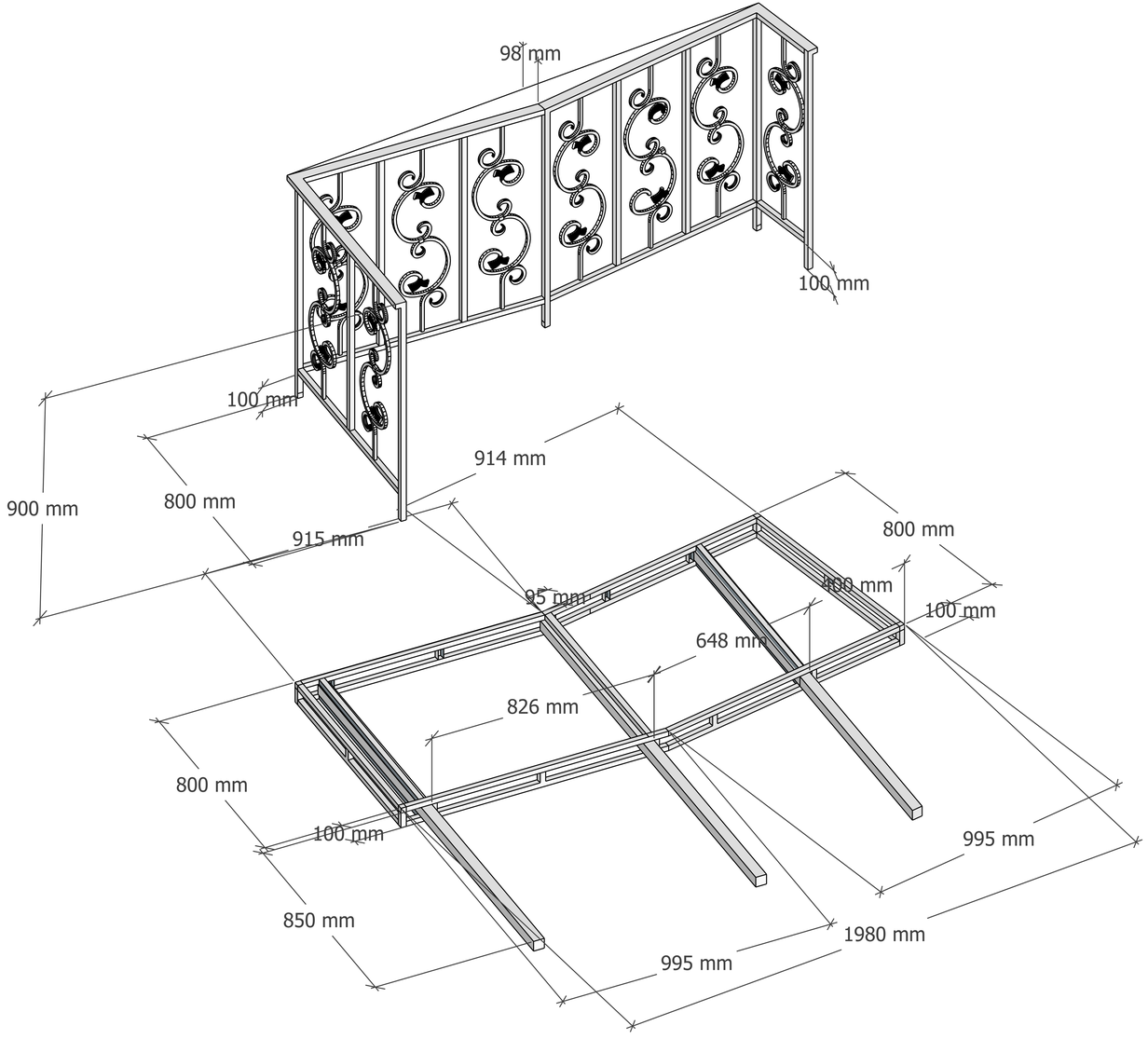
98 mm
100 mm
100 mm
900 mm
800 mm
914 mm
915 mm
95 mm
800 mm
100 mm
100 mm
648 mm
826 mm
800 mm
100 mm
995 mm
850 mm
1980 mm
995 mm