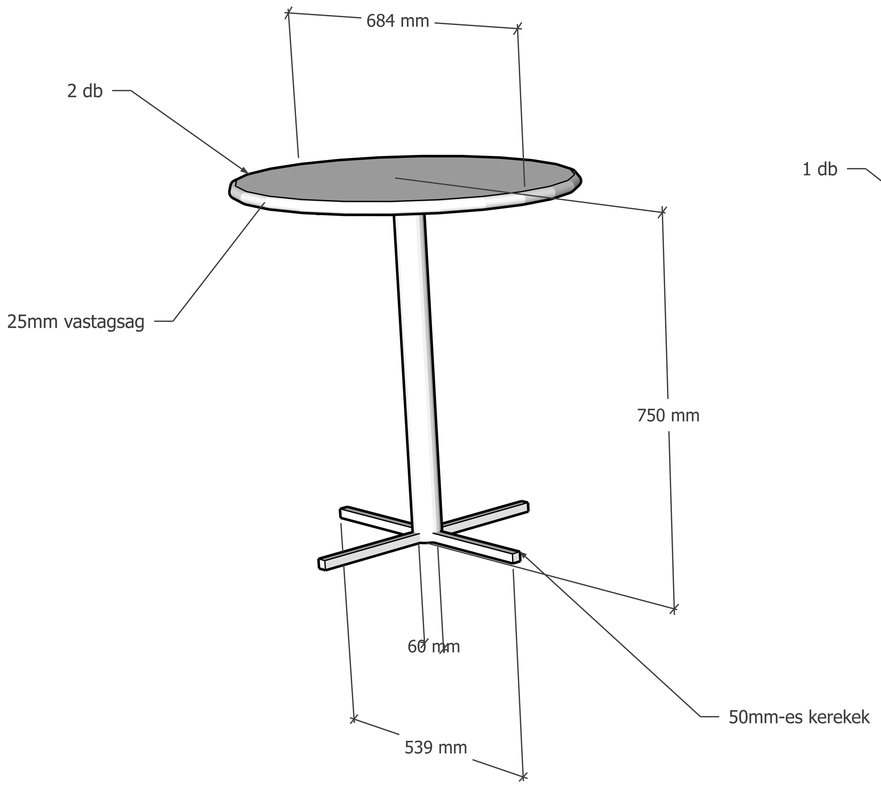
684 mm
2 db
25mm vastagsag
750 mm
60 mm
50mm-es kerekek
539 mm

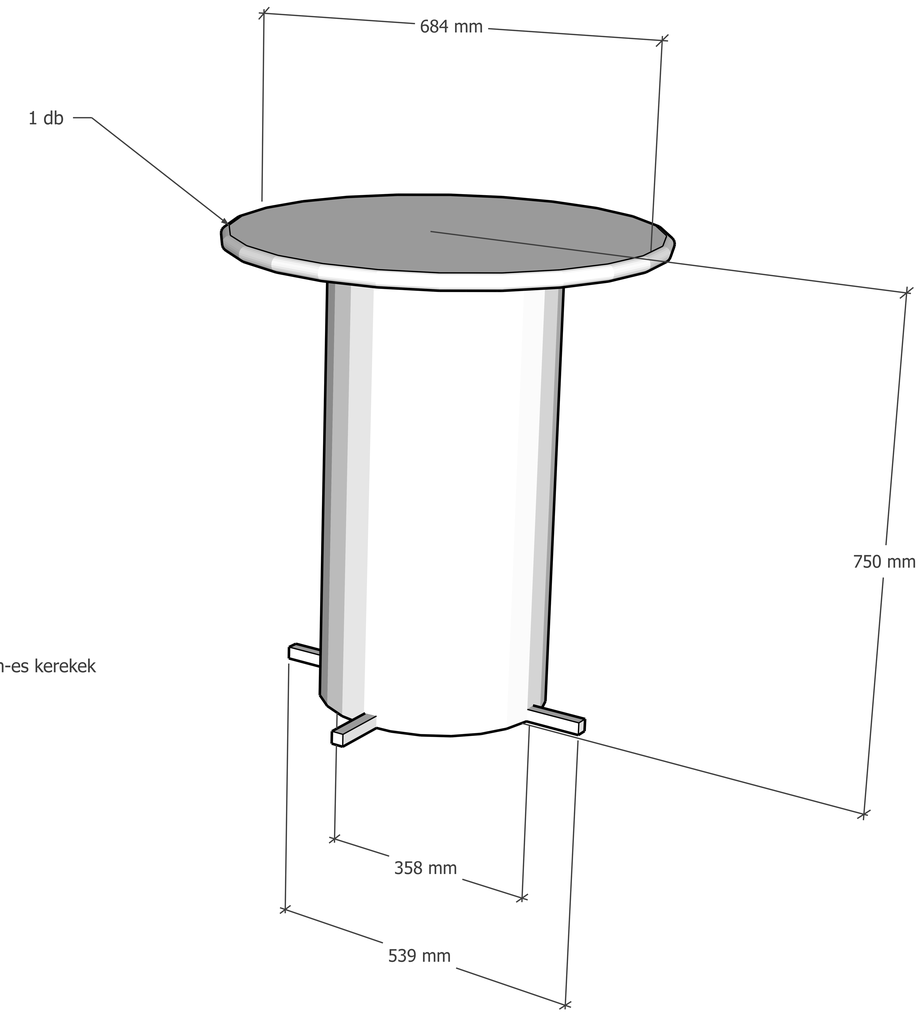
684 mm
1 db
750 mm
358 mm
539 mm