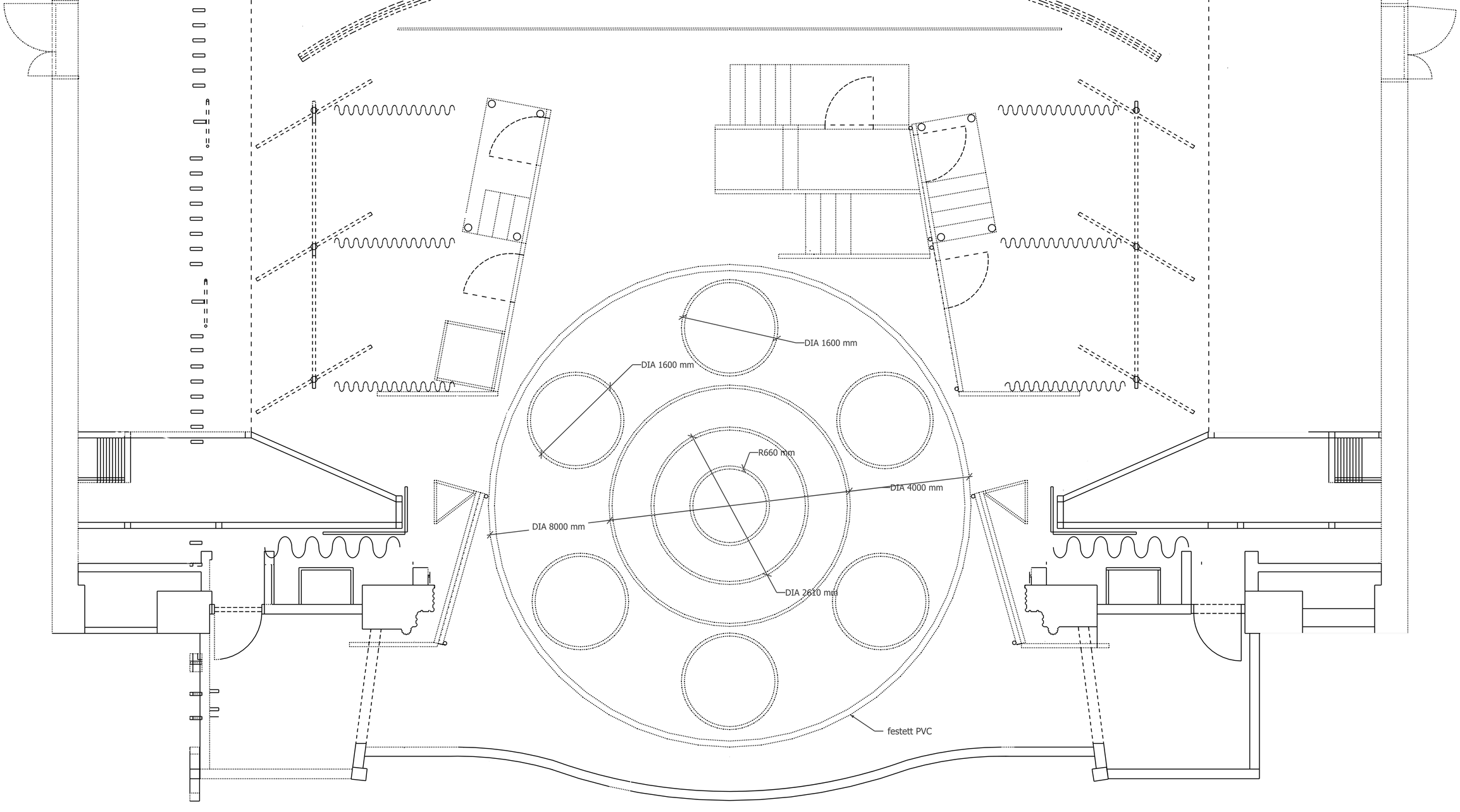
DIA 1600 mm
DIA 1600 mm
R660 mm
DIA 4000 mm
DIA 8000 mm
DIA 2610 mm
festett PVC

Enter text